Outdoor monobloc unit

LSE 360 - 1200 kW

Scroll compressor | R-410A refrigerant | Cooling only | Cooling / Heating | Monobloc unit | Axial fans

PLUS

- High efficiency when operating at partial load
- Electronically controlled electric expansion valve
- Incorporable hydronic kit
- High configurability and wide availability of accessories
- Compact dimensions
- Access to the tax incentives provided for energy retrofitting

Multi-scroll solutions for reliability and high efficiency at partial loads

Though a water chiller or heat pump is chosen on the basis of the maximum load of the system it is intended to serve, the actual thermal load of an air conditioning system is less than 60% of the rated load capacity 90% of the time. This range of LSE heat pumps and chillers was designed to handle this type of use in the most efficient manner; it is comprised of 14 models with cooling capacities from 370 to 1200 kW (650 kW with heat pump) and employs scroll compressors in a tandem or trio connection configuration on 2 or 4 cooling circuits. The high number of capacity control steps of this solution enables the unit to adapt its power to the actual needs of the system, with particular gains in efficiency under partial load conditions compared to traditional screw compressors. During operation under part load conditions, the compressors work with oversized exchange surfaces so as to achieve more advantageous thermodynamic cycles, thanks also to the use of an electronic expansion valve, a standard feature of all models. The microprocessor control unit automatically manages turning on the compressors depending on the required thermal load and ensures rotation according to the number of hours of operation with consequent increase in the duration. LSE is available also in a free-cooling version, to reduce energy consumption when it is necessary to produce chilled water during the coldest season of the year, with silenced operation in order to comply with noise containment regulations.

The "W" configuration of the finned block heat exchangers makes it possible to have a large amount of exchange surface with a small footprint, thereby resulting in machines with high power density.

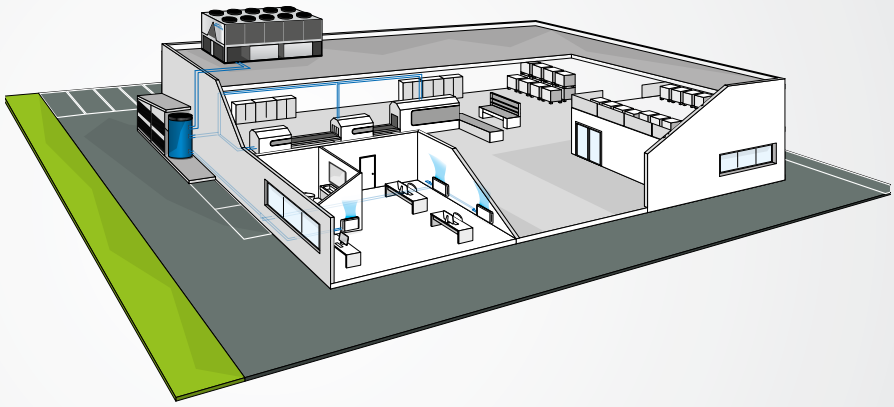

MAIN COMPONENTS

Structure

Painted galvanised sheet steel structure for an effective resistance to corrosive agents. Compressor compartment located below the finned heat exchangers to reduce the dimensions without compromising performance.

Compressors

Hermetic scroll compressors driven by electric motors and connected in tandem or trio version to maximize efficiency at partial loads.

Electronically controlled electric expansion valve

It represents, together with the compressor, the key component for the proper functioning of the unit. It optimizes the machines' operation at partial loads and increases the average seasonal energy efficiency.

Heat exchangers

Finned heat exchangers with copper pipes and aluminum fins in a "W" configuration to allow alternating defrosting operations and to minimize the negative effects on the system.

Microprocessor control

The microprocessor control unit efficiently manages the LSE units, the adjustment logic, the compressors, the alarms and, in the heat pumps, the cycle switchover and defrosting thanks to the Smart Defrost System logic.

Hydraulic kit

Option of choosing one or two pumps at standard or high head to meet system requirements, suitable for operation with glycol up to 30% and can be combined with a heat buffer tank.

CONFIGURATION

The models are completely configurable by selecting the version and the options. To the right is shown an example of configuration.

Version	Optional ▶	1	2	3	4	5	6	7	8	9	10	11	12
LSE558CL		0	B	4	S	0	C	0	2	0	0	M	3

To verify the compatibility of the options, use the selection software or the price list.

AVAILABLE VERSIONS

Cooling only versions

LSE..CS	Standard execution
LSE..CL	Low noise execution

Versions with reversible heat pump

LSE..HS	Standard execution
LSE..HL	Low noise execution

CONFIGURATION OPTIONS

1 - POWER SUPPLY
- **0** 400/3/50 + N
- **1** 400/3/50 with transformer
- **2** 400/3/50 + N + Circuit breakers
- **3** 400/3/50 with transformer+ Circuit breakers

2 - CONTROL MICROPROCESSOR AND THERMAL EXPANSION VALVE
- **B** Programmable (LCD 8x22 display) + electronic expansion valve
- **C** Programmable (LCD 8x22 display) + mechanical expansion valve

3 - WATER PUMP ON USER SIDE
- **0** Absent
- **1** Single pump
- **2** Uprated single pump
- **3** Dual pump for combined operation
- **4** Dual uprated pump for combined operation
- **5** Dual pump with timed rotation
- **6** Dual uprated pump with timed rotation

4 - BUFFER TANK
- **0** Absent
- **S** Buffer tank on user side

5 - PARTIAL HEAT RECOVERY (condensation control option is mandatory)
- **0** Absent
- **D** Desuperheater (40% of cooling capacity recovery in rated conditions)

6 - AIR FLOW MODULATION
- **0** Absent
- **C** Condensation control with fans adjusted by potentiometer
- **E** Condensation control, "EC brushless" electronically controlled fans

7 - ANTIFREEZE KIT
- **0** Absent
- **E** Present, basic unit (heating element only on exchangers)
- **P** Present, unit with pump/s and expansion tank
- **S** Present, unit with pump/s, expansion tank and tank

8 - REMOTE COMMUNICATION
- **0** Absent
- **1** RS485 Serial board (Modbus or Carel protocol)
- **2** Lonworks serial board
- **3** GSM modem kit
- **4** Ethernet card (SNMP or BACNET protocol) + clock card
- **5** Ethernet card + clock card + supervision software

9 - HEAT EXCHANGER CONSTRUCTION ON REQUEST
- **0** Standard
- **R** Copper / copper exchangers
- **C** Cataphoresis
- **B** Fins pre-coated with epoxy paint

10 - PACKING
- **0** Standard
- **1** Wooden crate
- **2** Wooden case

11 - VIBRATION ISOLATION
- **0** Absent
- **G** Rubber vibration dampers at the base of the unit
- **M** Spring vibration dampers at the base of the unit

12 - REMOTE CONTROL
- **0** Absent
- **1** Simplified remote control panel
- **3** Remote display for programmable microprocessor

ACCESSORIES

- **A** Power factor correction capacitors
- **B** Soft-starter kit (only for size 374)
- **C** Service kit (kit of sensors for quick diagnosis)
- **D** Pair of Victaulic couplings for quick water IN-OUT connection
- **E** ON/OFF status of the compressors
- **F** Remote contact for power step limits
- **G** Configurable digital alarm card
- **H** Outdoor temperature probe for setpoint compensation
- **I** Pressure gauges
- **L** Regulating filter kit (solenoid and tap on the liquid line)
- **M** Normative reference other than "97/23/CE - PED"
- **N** Clock card
- **P** Finned heat exchanger protective grille
- **Q** Metal filters for protecting finned heat exchanger

Rated technical data of LSE CS water chillers

LSE...CS		374	416	456	486	536	558	618
Power supply	V-ph-Hz	400V - 3N - 50						
Cooling capacity (1) (E)	kW	363	404	453	486	537	561	603
Power input (1) (E)	kW	134	151	160	175	210	196	213
EER (1) (E)		2,71	2,68	2,83	2,78	2,55	2,86	2,82
ESEER (E)		4,10	4,18	4,32	4,25	4,23	4,10	4,15
Eurovent efficiency class		C	C	C	C	D	B	C
Water flow (1)	l/h	62608	69676	78155	83846	92478	96705	103833
Water pressure drop (1) (E)	kPa	52	53	56	50	52	46	48
Available pressure head - LP pump (1)	kPa	165	142	188	173	138	161	143
Available pressure head - HP pump (1)	kPa	260	248	271	266	247	245	244
Maximum current absorption	A	316	352	362	382	420	462	480
Startup current	A	454	506	563	578	563	596	637
Startup current with softstarter kit	A	361	411	456	474	473	488	527
No. of compressors / circuits		4/2	6/2	6/2	6/2	6/2	8/4	8/4
Buffer tank volume	dm^3	600	600	600	600	600	1040	1040
Expansion vessel unit with pumps and tank	dm^3	48	48	48	48	48	48	48
Expansion vessel unit with pumps	dm^3	24	24	24	24	24	24	24
Sound power level (2) (E)	dB(A)	90	90	91	91	91	92	92
Transport weight unit with pump and tank	kg	2875	3320	3691	3715	3716	4622	4707
Operating weight unit with pump and full tank	kg	3475	3920	4291	4315	4316	5662	5747

LSE...CS		658	748	800	900	942	1072	1202
Power supply	V-ph-Hz	400V - 3N - 50						
Cooling capacity (1) (E)	kW	644	714	772	906	946	1071	1200
Power input (1) (E)	kW	231	277	296	336	349	418	461
EER (1) (E)		2,79	2,58	2,61	2,70	2,71	2,56	2,60
ESEER (E)		4,09	4,15	4,19	4,33	4,34	4,19	4,28
Eurovent efficiency class		C	D	D	C	C	D	D
Water flow (1)	l/h	110961	123008	133149	156086	163152	184568	206806
Water pressure drop (1) (E)	kPa	49	51	58	56	60	51	55
Available pressure head - LP pump (1)	kPa	210	179	145	186	174	154	118
Available pressure head - HP pump (1)	kPa	237	265	250	282	270	252	216
Maximum current absorption	A	506	564	631	765	771	792	975
Startup current	A	648	677	738	781	871	890	1190
Startup current with softstarter kit	A	542	581	635	684	756	806	1045
No. of compressors / circuits		8/4	8/4	10/4	10/4	12/4	12/4	12/4
Buffer tank volume	dm^3	1040	1040	1040	1040	1040	1040	1040
Expansion vessel unit with pumps and tank	dm^3	48	48	48	48	48	48	48
Expansion vessel unit with pumps	dm^3	24	24	24	24	24	24	24
Sound power level (2) (E)	dB(A)	92	92	92	93	93	93	95
Transport weight unit with pump and tank	kg	4972	5411	5610	6248	6486	6626	7890
Operating weight unit with pump and full tank	kg	6012	6451	6650	7288	7526	7666	8930

(1) Water temperature 12/7 °C, outdoor air temperature 35 °C (UNI EN 14511:2011)
(2) Sound power level measured according to UNI EN ISO 9614
(E) EUROVENT certified data

Rated technical data of LSE CL water chillers

LSE...CL		374	416	456	486	536	558	618
Power supply	V-ph-Hz	400V - 3N - 50						
Cooling capacity (1) (E)	kW	350	387	438	470	514	544	581
Power input (1) (E)	kW	138	156	162	178	219	198	217
EER (1) (E)		2,53	2,49	2,70	2,64	2,34	2,75	2,67
ESEER (E)		4,08	4,11	4,25	4,18	4,16	4,07	4,08
Eurovent efficiency class		D	E	C	D	E	C	D
Water flow (1)	l/h	60362	66689	75507	80958	88499	93675	100169
Water pressure drop (1) (E)	kPa	49	49	53	47	47	43	45
Available pressure head - LP pump (1)	kPa	175	156	201	187	159	170	154
Available pressure head - HP pump (1)	kPa	266	257	279	274	260	254	249
Maximum current absorption	A	305	343	347	368	405	442	462
Startup current	A	442	497	556	573	548	576	619
Startup current with softstarter kit	A	361	411	456	474	473	488	527
No. of compressors / circuits		4/2	6/2	6/2	6/2	6/2	8/4	8/4
Buffer tank volume	dm^3	600	600	600	600	600	1040	1040
Expansion vessel unit with pumps and tank	dm^3	48	48	48	48	48	48	48
Expansion vessel unit with pumps	dm^3	24	24	24	24	24	24	24
Sound power level (2) (E)	dB(A)	82	82	83	83	83	84	84
Transport weight unit with pump and tank	kg	2980	3440	3811	3855	3856	4802	4887
Operating weight unit with pump and full tank	kg	3580	4040	4411	4455	4456	5842	5927

LSE...CL		658	748	800	900	942	1072	1202
Power supply	V-ph-Hz	400V - 3N - 50						
Cooling capacity (1) (E)	kW	619	689	740	871	911	1019	1174
Power input (1) (E)	kW	237	283	304	348	359	442	470
EER (1) (E)		2,62	2,44	2,43	2,50	2,53	2,31	2,50
ESEER (E)		4,02	4,08	4,12	4,26	4,27	4,12	4,28
Eurovent efficiency class		D	E	E	D	D	E	D
Water flow (1)	l/h	106662	118788	127603	150102	156955	175580	202321
Water pressure drop (1) (E)	kPa	46	48	54	51	56	47	53
Available pressure head - LP pump (1)	kPa	223	192	164	197	185	170	127
Available pressure head - HP pump (1)	kPa	243	271	259	292	280	267	225
Maximum current absorption	A	488	542	609	743	749	767	975
Startup current	A	630	656	716	759	851	869	1190
Startup current with softstarter kit	A	542	581	635	684	756	806	1045
No. of compressors / circuits		8/4	8/4	10/4	10/4	12/4	12/4	12/4
Buffer tank volume	dm^3	1040	1040	1040	1040	1040	1040	1040
Expansion vessel unit with pumps and tank	dm^3	48	48	48	48	48	48	48
Expansion vessel unit with pumps	dm^3	24	24	24	24	24	24	24
Sound power level (2) (E)	dB(A)	84	85	85	85	87	90	92
Transport weight unit with pump and tank	kg	5152	5516	5715	6488	6726	6966	7890
Operating weight unit with pump and full tank	kg	6192	6556	6755	7528	7766	8006	8930

(1) Water temperature 12/7 °C, outdoor air temperature 35 °C (UNI EN 14511:2011)
(2) Sound power level measured according to UNI EN ISO 9614
(E) EUROVENT certified data

Rated technical data of LSE HS heat pumps

LSE…HS		374	416	456	486	536	558	618	658
Power supply	V-ph-Hz	400 - 3N - 50							
Cooling capacity (1) (E)	kW	363	404	453	486	537	561	603	644
Power input (1) (E)	kW	134	151	160	175	210	196	213	231
EER (1) (E)		2,71	2,68	2,83	2,78	2,55	2,86	2,82	2,79
ESEER (E)		4,26	4,18	4,32	4,25	4,23	4,15	4,15	4,09
Eurovent efficiency class		C	D	C	C	D	C	C	C
Water flow (1)	l/h	62608	69676	78155	83846	92478	96705	103833	110961
Water pressure drop (1) (E)	kPa	52	53	56	50	52	46	48	49
Available pressure head - LP pump (1)	kPa	165	142	188	173	138	161	143	210
Available pressure head - HP pump (1)	kPa	260	248	271	266	247	245	244	237
Heating capacity (2) (E)	kW	424	470	516	553	624	651	700	748
Power input (2) (E)	kW	130	142	156	166	191	192	207	221
COP (2) (E)		3,31	3,35	3,35	3,37	3,31	3,43	3,42	3,41
Eurovent efficiency class		A	A	A	A	A	A	A	A
Water flow (2)	l/h	73388	81350	89265	95556	107783	112689	121079	129468
Water pressure drop (2) (E)	kPa	66	66	67	72	77	56	59	60
Available pressure head - LP pump (2)	kPa	117	88	135	106	48	112	87	151
Available pressure head - HP pump (2)	kPa	227	213	237	220	188	197	216	208
Maximum current absorption	A	316	352	362	382	465	462	480	506
Startup current	A	454	506	563	578	563	596	637	648
Startup current with softstarter kit	A	361	411	456	474	473	488	527	542
No. of compressors / circuits		4/2	6/2	6/2	6/2	6/2	8/4	8/4	8/4
Buffer tank volume	dm^3	600	600	600	600	600	1040	1040	1040
Expansion vessel unit with pumps and tank	dm^3	48	48	48	48	48	48	48	48
Expansion vessel unit with pumps	dm^3	24	24	24	24	24	24	24	24
Sound power level (3) (E)	dB(A)	90	90	91	91	91	92	92	92
Transport weight unit with pump and tank	kg	3015	3460	3831	3875	3876	4872	4957	5172
Operating weight unit with pump and full tank	kg	3615	4060	4431	4475	4476	5912	5997	6212

(1) Water temperature 12/7 °C, outdoor air temperature 35 °C (UNI EN 14511:2011)
(2) Water temperature 40/45 °C, outdoor air temperature 7 °C D.B. / 6 °C W.B. (UNI EN 14511:2011)
(3) Sound power level measured according to UNI EN ISO 9614
(E) EUROVENT certified data

Rated technical data of LSE HL heat pumps

LSE…HL		374	416	456	486	536	558	618	658
Power supply	V-ph-Hz	400 - 3N - 50							
Cooling capacity (1) (E)	kW	350	387	438	470	514	544	581	619
Power input (1) (E)	kW	138	156	162	178	219	198	217	237
EER (1) (E)		2,53	2,49	2,70	2,64	2,34	2,75	2,67	2,62
ESEER (E)		4,19	4,11	4,25	4,18	4,16	4,07	4,08	4,02
Eurovent efficiency class		D	E	C	D	E	C	D	D
Water flow (1)	l/h	60362	66689	75507	80958	88499	93675	100169	106662
Water pressure drop (1) (E)	kPa	49	49	53	47	47	43	45	46
Available pressure head - LP pump (1)	kPa	175	156	201	187	159	170	154	223
Available pressure head - HP pump (1)	kPa	266	257	279	274	260	254	249	243
Heating capacity (2) (E)	kW	423	470	517	554	627	647	696	745
Power input (2) (E)	kW	127	140	154	165	192	188	203	219
COP (2) (E)		3,33	3,35	3,35	3,35	3,26	3,44	3,42	3,40
Eurovent efficiency class		A	A	A	A	A	A	A	A
Water flow (2)	l/h	73039	80974	88854	95116	107269	111648	119965	128282
Water pressure drop (2) (E)	kPa	65	66	66	71	76	55	58	59
Available pressure head - LP pump (2)	kPa	118	90	138	108	51	115	91	155
Available pressure head - HP pump (2)	kPa	229	214	239	221	190	200	218	210
Maximum current absorption	A	305	343	347	368	451	442	462	488
Startup current	A	442	497	556	573	548	576	619	630
Startup current with softstarter kit	A	361	411	456	474	473	488	527	542
No. of compressors / circuits		4/2	6/2	6/2	6/2	6/2	8/4	8/4	8/4
Buffer tank volume	dm^3	600	600	600	600	600	1040	1040	1040
Expansion vessel unit with pumps and tank	dm^3	48	48	48	48	48	48	48	48
Expansion vessel unit with pumps	dm^3	24	24	24	24	24	24	24	24
Sound power level (3) (E)	dB(A)	82	82	83	83	83	84	84	84
Transport weight unit with pump and tank	kg	3120	3580	3951	3995	3996	5052	5137	5402
Operating weight unit with pump and full tank	kg	3720	4180	4551	4595	4596	6092	6177	6442

(1) Water temperature 12/7 °C, outdoor air temperature 35 °C (UNI EN 14511:2011)
(2) Water temperature 40/45 °C, outdoor air temperature 7 °C D.B. / 6 °C W.B. (UNI EN 14511:2011)
(3) Sound power level measured according to UNI EN ISO 9614
(E) EUROVENT certified data

Dimensional drawings

LSE 374 - 416

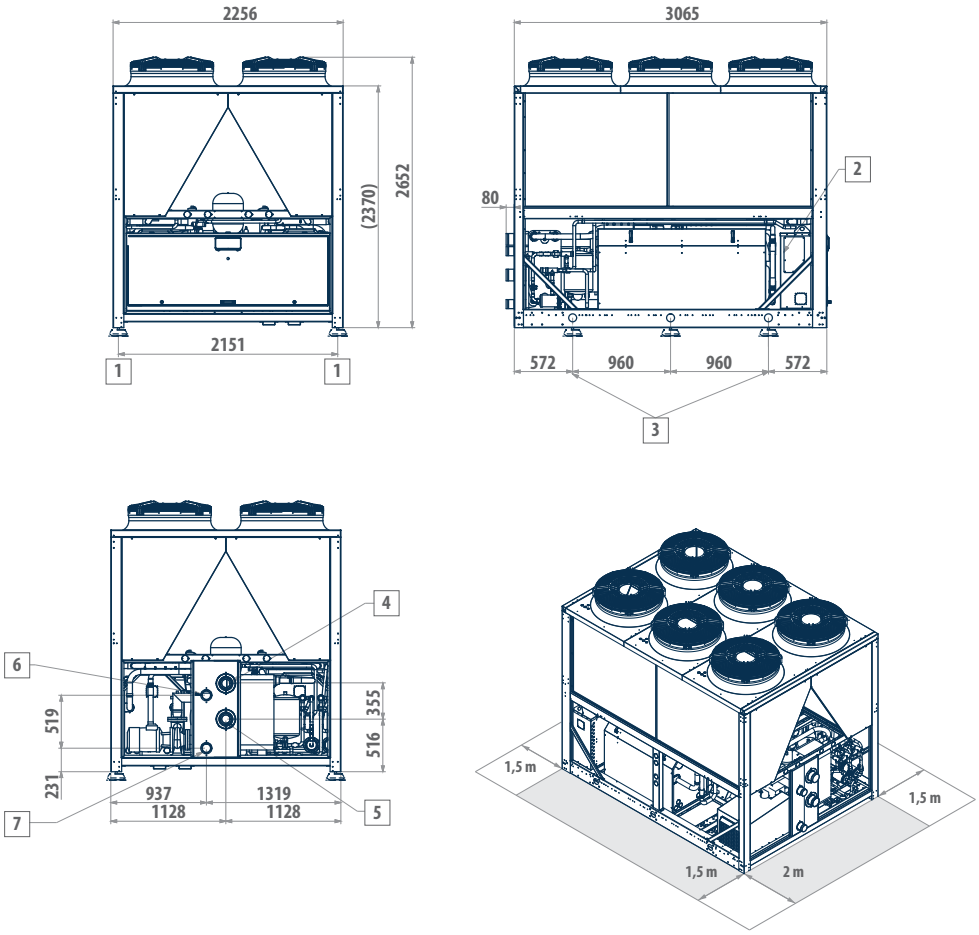

LEGEND	
1	Vibration dampers
2	Power supply input
3	Fastening points
4	Water inlet (4"Victaulic)
5	Water outlet (4"Victaulic)
6	Optional heat recovery water outlet (Victaulic 3")
7	Optional heat recovery water inlet (Victaulic 3")

Dimensional drawings

LSE 456 - 486 - 536

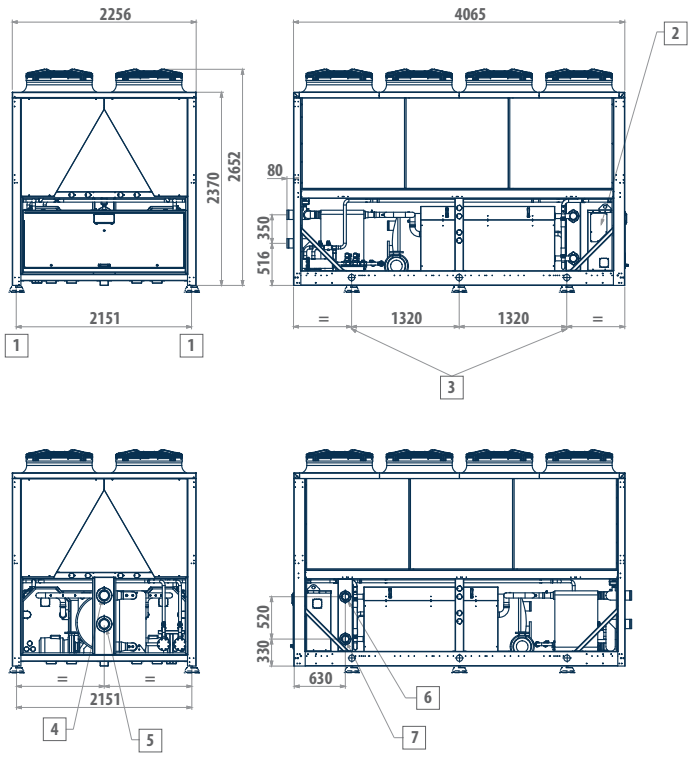

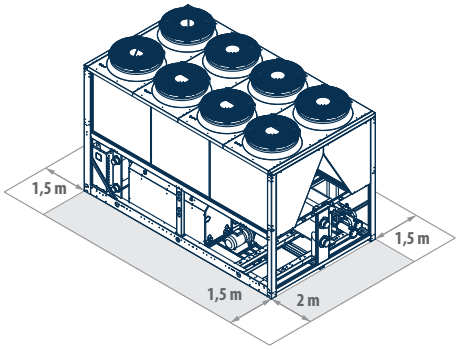

LEGEND	
1	Vibration dampers
2	Power supply input
3	Fastening points
4	Water inlet (4" Victaulic)
5	Water outlet (4" Victaulic)
6	Optional heat recovery water outlet (Victaulic 3")
7	Optional heat recovery water inlet (Victaulic 3")

Dimensional drawings

LSE 558 - 618 - 658

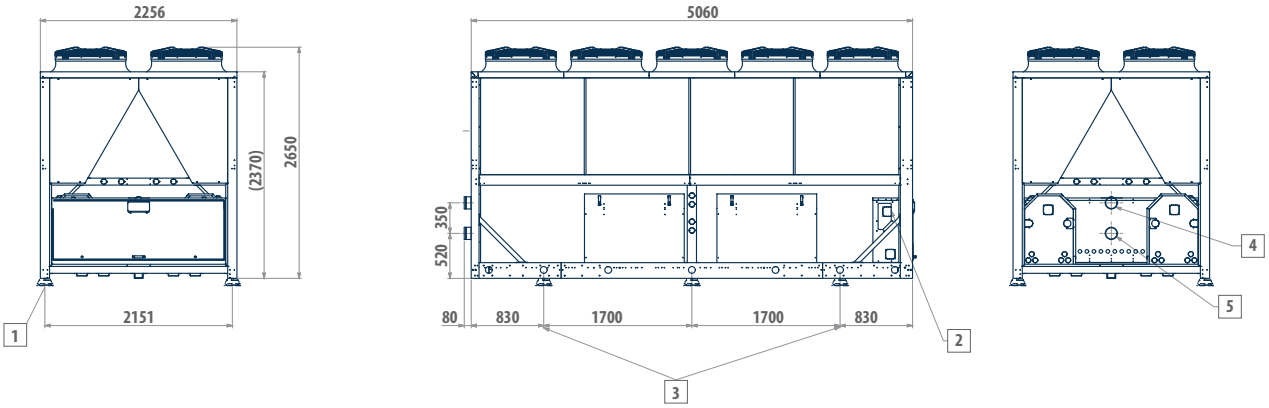

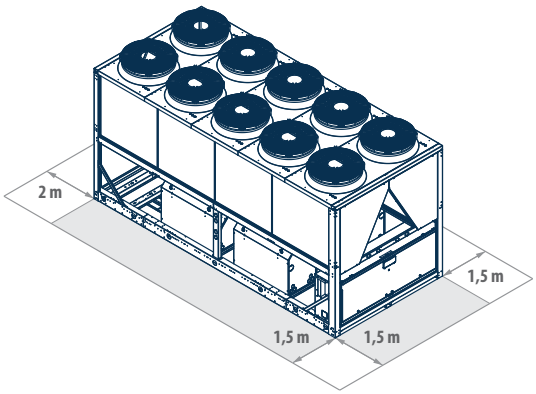

LEGEND

1	Vibration dampers
2	Power supply input
3	Fastening points
4	Water inlet (5"Victaulic)
5	Water outlet (5"Victaulic)

Dimensional drawings

LSE 748 - 800

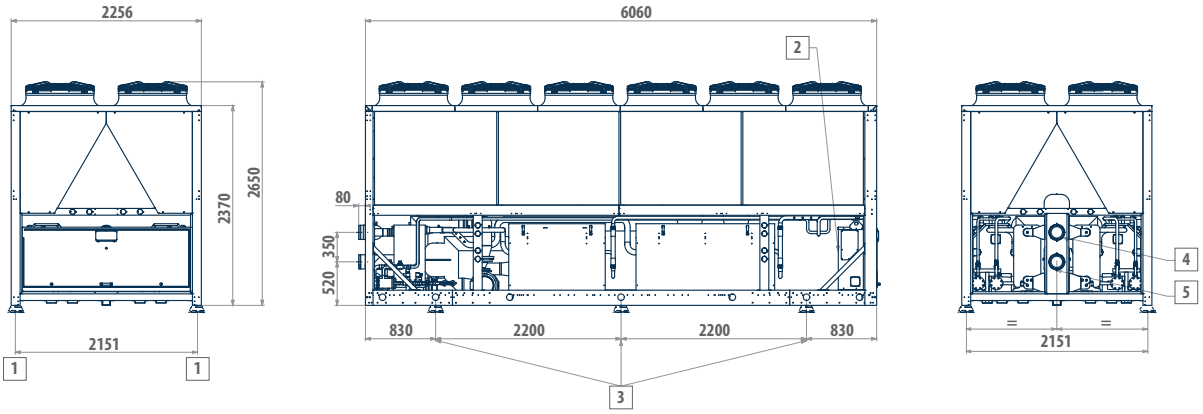

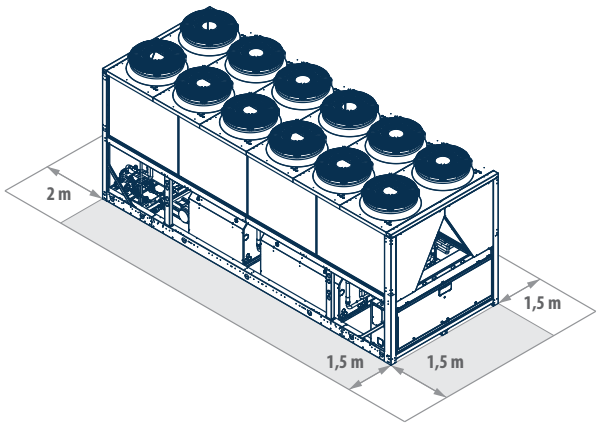

LEGEND

1	Vibration dampers
2	Power supply input
3	Fastening points
4	Water inlet (6" Victaulic)
5	Water outlet (6" Victaulic)

Dimensional drawings

LSE 900 - 942 - 1072

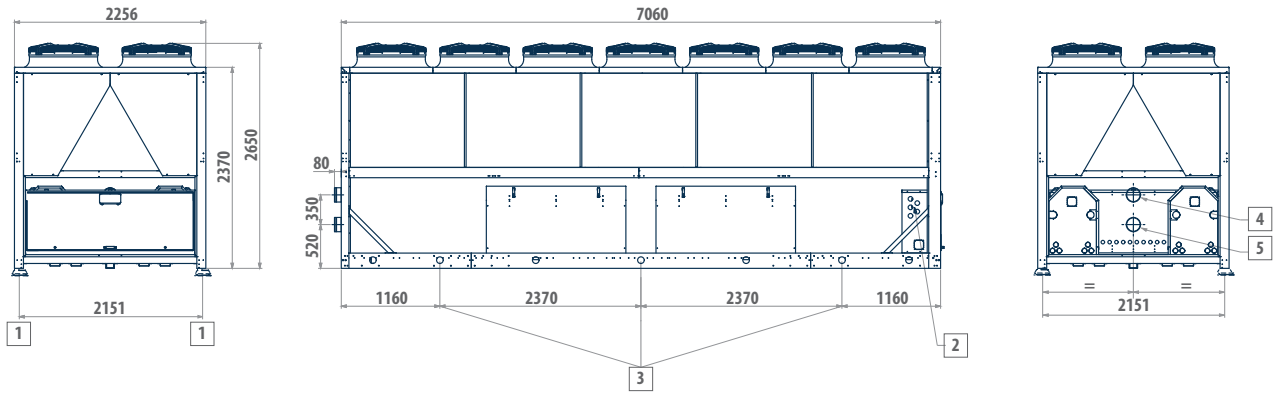

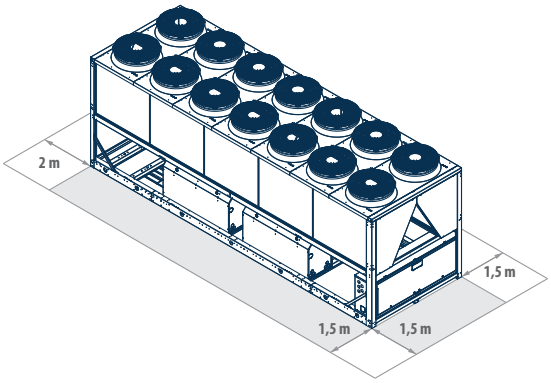

LEGEND

1	Vibration dampers
2	Power supply input
3	Fastening points
4	Water inlet (6" Victaulic)
5	Water outlet (6" Victaulic)

Dimensional drawings

LSE 1202

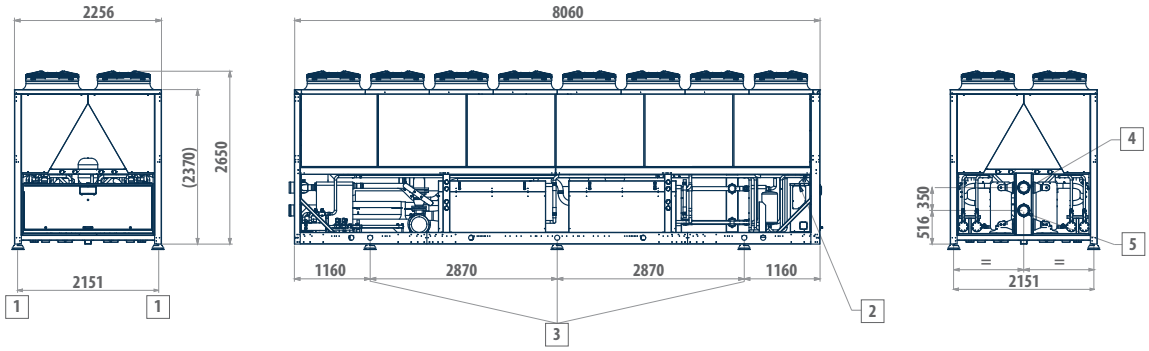

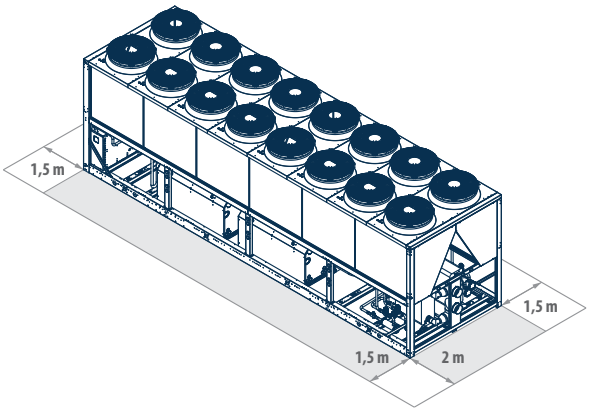

LEGEND

1	Vibration dampers
2	Power supply input
3	Fastening points
4	Water inlet (6"Victaulic)
5	Water outlet (6"Victaulic)
6	Optional heat recovery water outlet (Victaulic 4")
7	Optional heat recovery water inlet (Victaulic 4")